Instruction manual

Cooking range electric 4x plate on open cabinet 400 V
SPF 80 E

2026-10-07

www.rmgastro.com

TABLE OF CONTENTS

1. DECLARATION OF CONFORMITY 3

2. TECHNICAL DATA 3

3. LOCATION ELECTRIC 3

4. SAFETY MEASURES FOR FIRE PROTECTION 3

5. INSTALLATION 4

6. CONNECTING THE ELECTRICAL CABLE TO THE NETWORK 4

7. INSTRUCTIONS FOR USE 5

8. ASSEMBLY DIAGRAM 6

9. CLEANING AND MAINTENANCE 11

1. DECLARATION OF CONFORMITY

Decree of the Ministry of Health of the Czech Republic no. 38/2001 Coll. of 19 January 2001 Regulation (EC) No 1907/2006 - Registration, Evaluation, Authorisation and Restriction of Chemicals (REACH) Regulation of the European Parliament and Council Regulation (EC) no. 1935/2004 of 27 October 2004

The products meet the requirements of §26 of Act No.258/2000 as amended. The products meet the requirements of RoHS Directive 2015/863/EU, 10/2011, 517/2014, 2015/1094, 2015/1095.

Attention, the manufacturer gives up any responsibility in case of direct and indirect damage that is relate to poor installation, incorrect intervention or adjustments, insufficient maintenance, incorrect by using and which are eventually caused by other causes that the points referred to in the conditions sales. This appliance is intended only for professional use and must be operated by qualified by persons. Parts that have been secured by the manufacturer or authorized worker after the setting rebuild.

2. TECHNICAL DATA

The label with technical data is located on the side or back panel of the device. Please read the wiring diagram and all the following information in the attached manual before installation.

Net Width [mm]	Net Depth [mm]	Net Height [mm]	Net Weight [kg]	Power electric [kW]	Loading
800	866	866	83.00	10.000	400 V / 3N - 50 Hz

Gross depth [mm]	Gross Height [mm]	Maximum device temperature [°C]	Minimum device temperature [°C]	Number of burners/ hot plates	Number of power control stages
800	1065	400	50	4	6

Gross Volume [m3]	Net Volume [m3]	Gross Weight [kg]	Gross Width [mm]	Worktop Thickness [mm]
0.716	0.485	94.00	840	1.00

3. LOCATION ELECTRIC

For the correct operation and placement of the appliance, it is necessary to observe the following all prescribed standards for the given market. Unpack the device and check that the device has not been damaged during transport. Place the device on a horizontal surface (maximum unevenness up to 2°). Small unevenness can be leveled with adjustable feet. If the device will be placed in such a way that it will be in contact with the walls of the furniture, these must withstand a temperature of up to 60°C. Installation, adjustment, commissioning must be performed by a qualified person who is authorized to perform such operations, according to applicable standards. The device can be installed separately or in series with devices of our production. A minimum distance of 10 cm from flammable materials must be observed. In this case, it is necessary to secure the appropriate modifications to ensure the thermal insulation of the combustible parts. The appliance must only be installed on a non-flammable surface or against a non-flammable wall. **Parts of the appliance provided by the manufacturer. or his representative, the worker performing the installation may not rebuild the product.**

4. SAFETY MEASURES FOR FIRE PROTECTION

- the appliance may only be operated by adults
- the appliance may be used safely in accordance with applicable market standards:

Fire protection in spaces with special risk or danger

Protection against the effects of heat

- the appliance must be placed so that it stands or hangs firmly on a non-combustible surface

Objects of flammable substances must not be placed on the appliance at a distance less than a safe distance from it (the smallest distance between the appliance and flammable substances is 10 cm).

Table: degree of flammability of building materials included in st. flammability of substances and products

Degree of flammability	Building materials
A - non-flammable	granite, sandstone, concrete, brick, ceramic tiles, plaster
B - Not easily flammable	Acumin, Heraclitus, Lihnos, Itaver
C1 - highly flammable	wood, hardwood, plywood, hard paper, umakart
C2 - moderately flammable	chipboards, solodur, cork boards, rubber, flooring
C3 - Highly flammable	wood fiber boards, polystyrene, polyurethane, PVC

- information on the degree of flammability of common building materials is given in the table above. Appliances must be installed in a safe manner. During installation, the relevant design, safety and hygiene regulations must also be respected:
- fire safety of local appliances and heat sources
- fire protection in areas with special risk or danger
- protection against the effects of heat

5. INSTALLATION

Important: The manufacturer does not provide any warranty for defects arising as a result of incorrect use, failure to follow the instructions contained in the attached user manual and mishandling of appliances. Installation, modification and repair of appliances for large kitchens, as well as their dismantling due to possible damage to the gas supply, can only be carried out on the basis of a maintenance contract, this contract can be concluded with an authorized dealer, while technical regulations and standards and regulations must be observed regarding installation, electrical supply, gas connection and work safety. Technical instructions for installation and adjustment, for use by specialized technicians ONLY. The instructions that follow refer to a technician qualified for installation to carry out all operations in the most correct manner and according to the applicable standards. Any activity related to regulation etc. must only be performed with the device disconnected from the network. If it is necessary to keep the appliance under voltage, the utmost care must be taken. The type of appliance for extraction is declared on the nameplate, it is an A1 appliance.

6. CONNECTING THE ELECTRICAL CABLE TO THE NETWORK

Installation of the electrical supply - this supply must be separately secured. Ato with the corresponding circuit breaker of rated current depending on the power input of the installed device. Check the power consumption of the device on the production label on the back panel (or side) of the device. The connected ground wire must be longer than the other wires. Connect the device directly to the network, it is necessary to insert a switch between the device and the device with a minimum distance of 3 mm between the individual contacts, which corresponds to the applicable standards and load. The earth supply (yellow-green) must not be interrupted by this switch. Connect the device to the mains if the socket has adequate protection. In any case, the supply cable must be located so that it does not reach a temperature of 50 degrees higher than the environment at any point. Before the appliance is connected to the network, it is necessary to first make sure that:

- the supply circuit breaker and the internal distribution can withstand the current load of the appliance (see matrix label)
- the distribution board is equipped with effective grounding according to the standards of the relevant market and the conditions given by law
- the socket or switch in the supply is easily accessible from the appliance
- the electrical supply to the device must be made of oil-resistant material

We disclaim any responsibility in the event that these standards are not respected and in the event of a violation of the above principles. Before first use, you must clean the device, see chapter """"cleaning and maintenance"""". The appliance must be grounded using a screw with a grounding mark.

- Do not insert the plug of the power supply into the electrical outlet. sockets and do not pull out the zel. sockets with wet hands and pulling on the power cord!

- Do not use extension cords or multiple sockets.
- **The mains connection point must have a maximum of the following impedance: ZMAX = 0.042 + j 0.026 Ω for the phase conductors and 0.028 + j 0.017 Ω for the neutral conductor.**

7. INSTRUCTIONS FOR USE

SWITCHING ON THE HOTPLATES

- Before connecting to the electrical network, all control knobs must be placed in the „0“ position.

- The first operation of the device must be carried out in a well-ventilated room due to the „burn-in“ of the hotplates, which lasts approximately 30 minutes. After at least 30 minutes have elapsed, the device is ready for operation.

Using the control knob of the required hotplate, we set the desired power - position „1÷6“. A control light

tplate by tur-

MAINTENANCE

The space under the plates can also be cleaned. Around the plates there is a space that allows dirt to be swept into the device, then the plates are grasped and placed on the top plate so that there is access to the pan in which the plates are located. The dirt is then swept out through an opening that leads into a drawer. This drawer is then pulled out, the dirt is removed and the drawer is returned to its place.

8. ASSEMBLY DIAGRAM

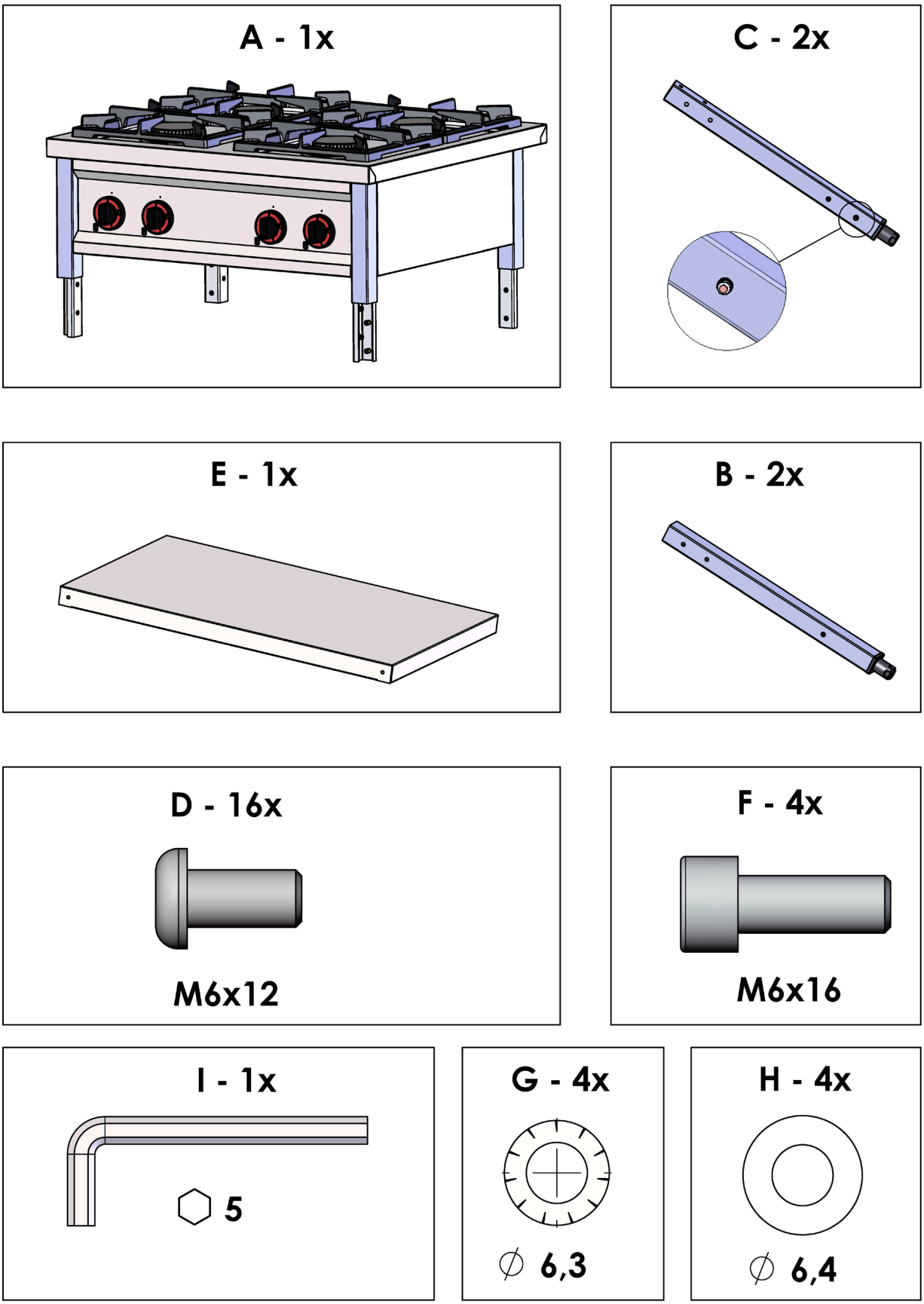

1

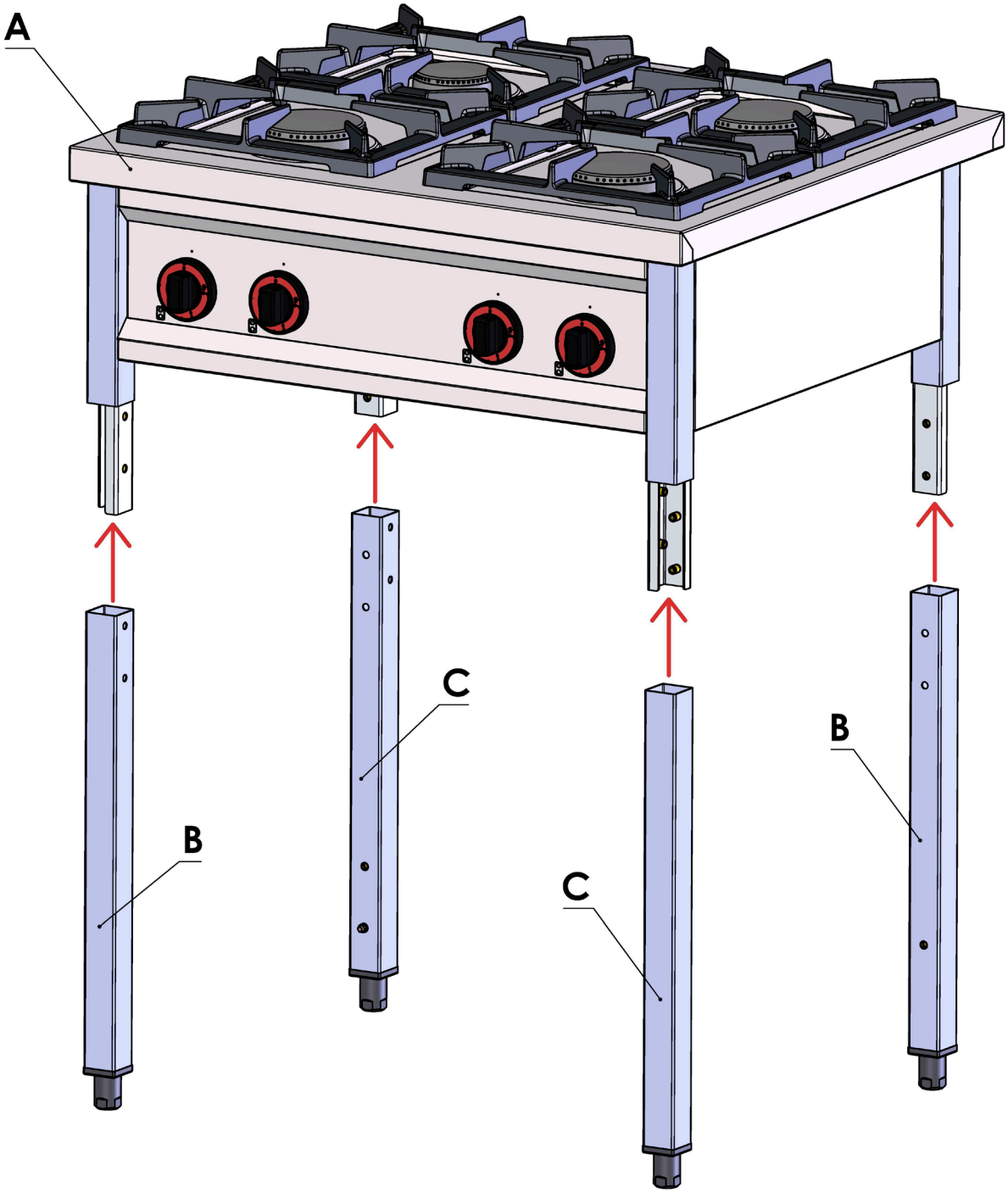

2

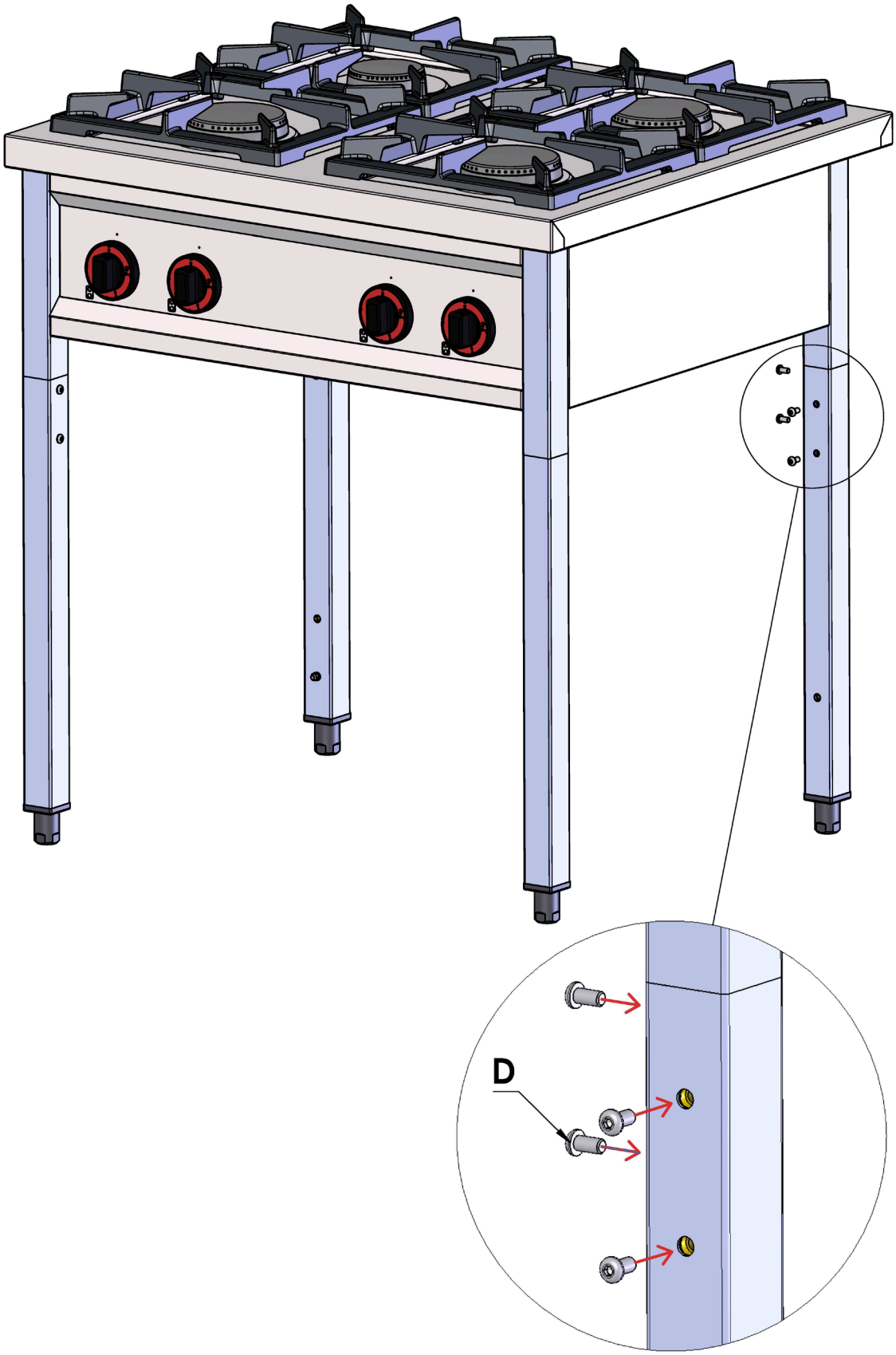

3

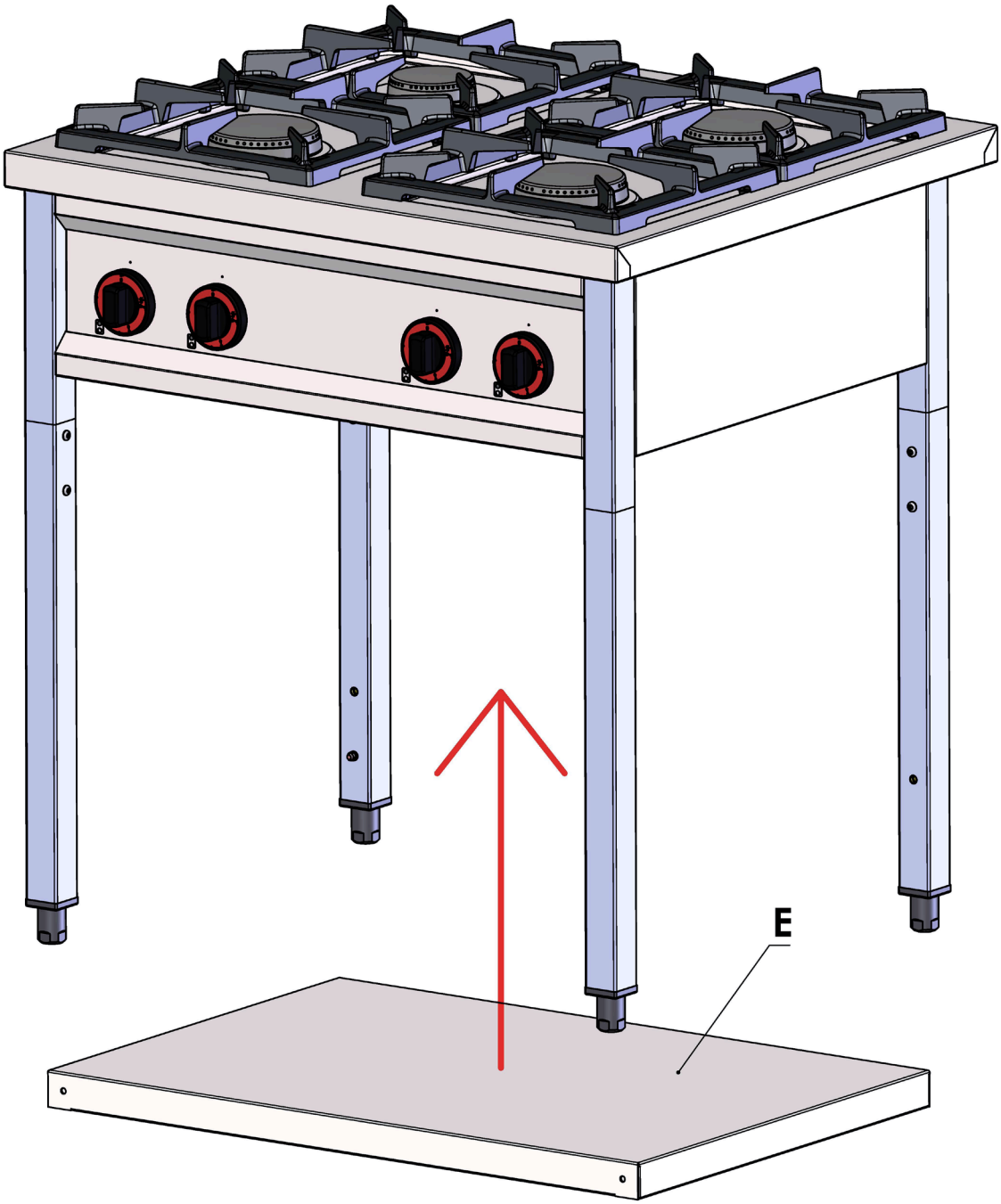

4

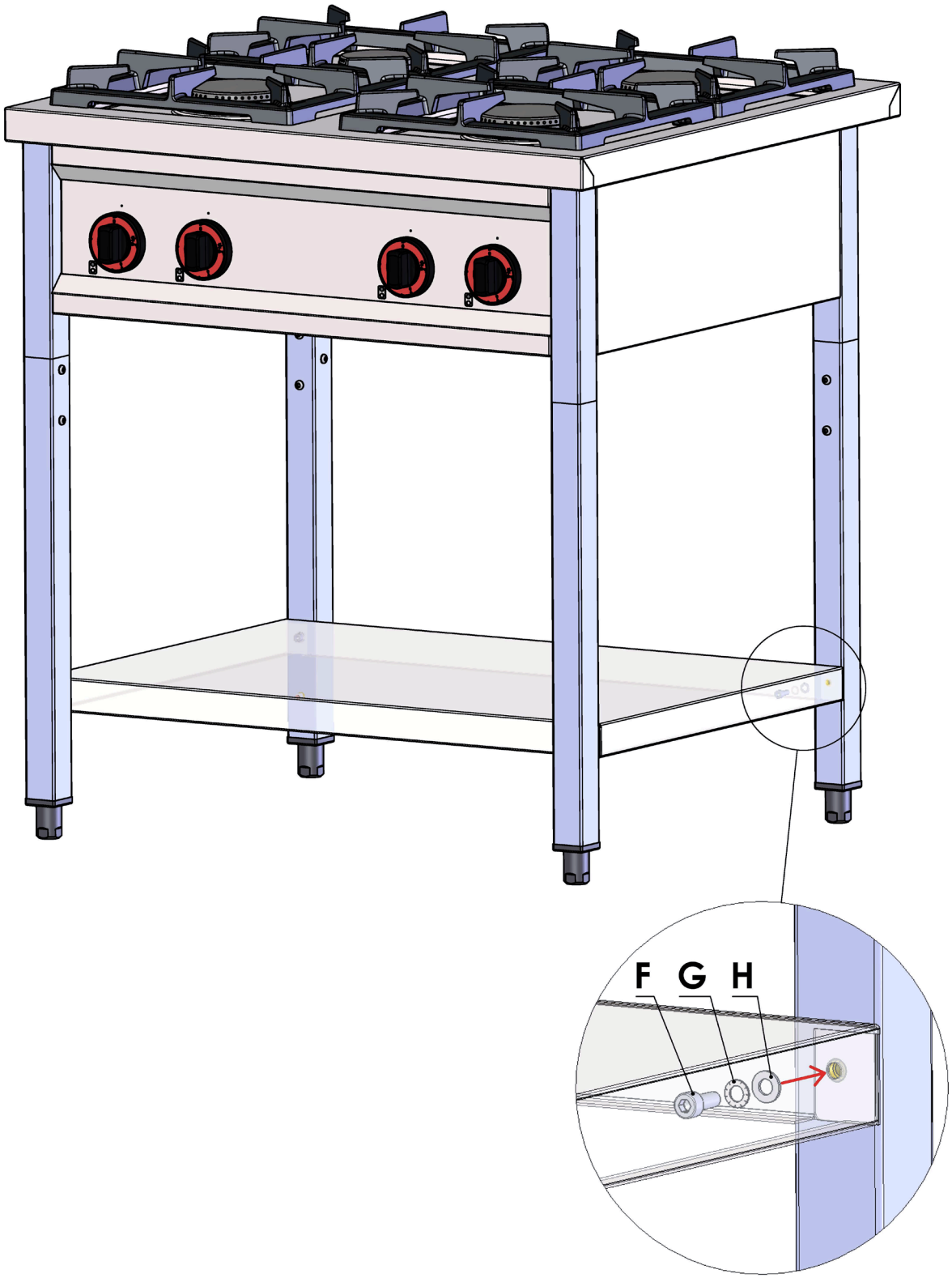

9. CLEANING AND MAINTENANCE

It is recommended to have the device checked with a specialist service at least once a year. All the interventions in the device can only be carried out by a qualified person who has the authorization to do so. **CAUTION!** The device must not be cleaned with direct or pressure water. Clean the equipment daily. Daily maintenance extends the life and efficiency of the equipment. Always turn off the main inlet to the device. Wash the stainless steel parts with a damp cloth with a detergent without coarse particles and wipe dry. Do not use abrasive or corrosive cleaning agents. Attention! Before using the device, it is necessary to remove the protective foil from the entire surface, and then wash it well with water with detergent, and then wipe it with a damp cloth. **ALERT!** The warranty does not apply to all consumables subject to normal wear (rubber seals, bulbs, glass and plastic parts, etc.). The warranty also does not apply to the device if the installation is not carried out in accordance with the instructions - an authorized worker according to the corresponding standards and if the equipment was unprofessionally manipulated (interventions in the internal equipment, etc.) or were operated by unhappy staff and contrary to the instructions for use, further The warranty does not apply to damage by natural effects or other external intervention. **Required service organization 2 times a year. After the lifetime, the shipping packaging and equipment are submitted to the collection, according to the regulations on waste management and hazardous waste.**